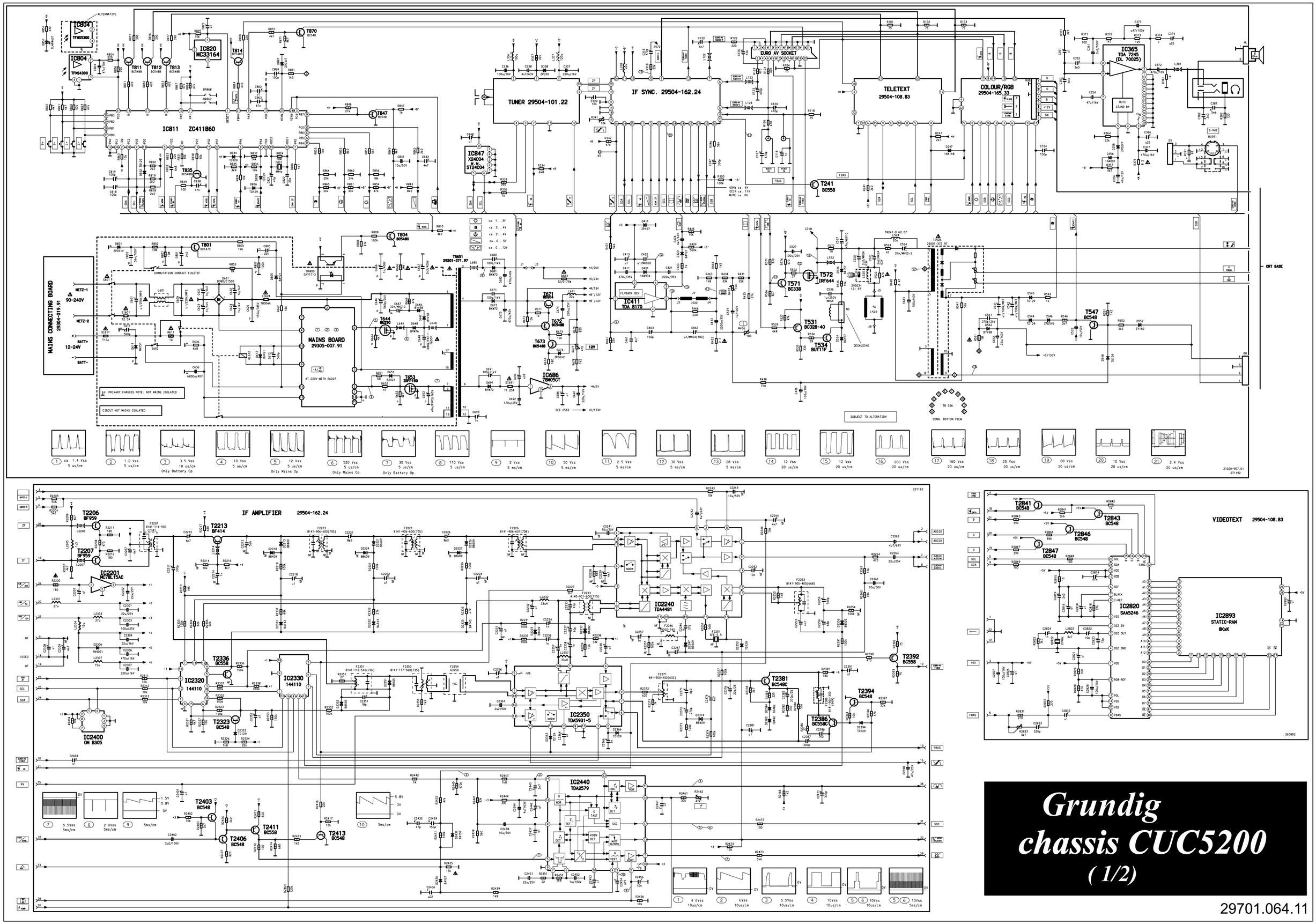

Grundig chassis CUC5200 (1/2)

29701.064.11

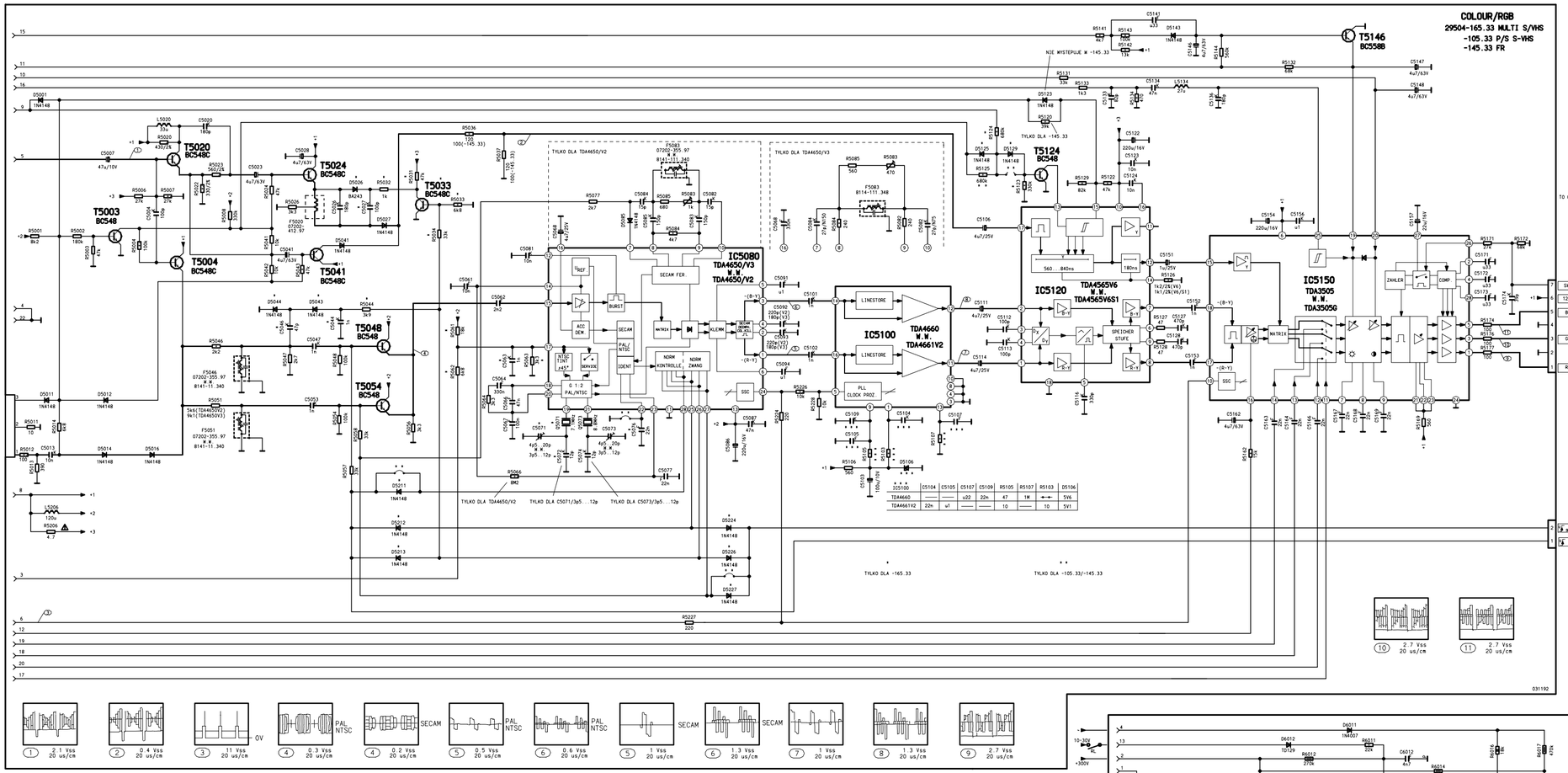

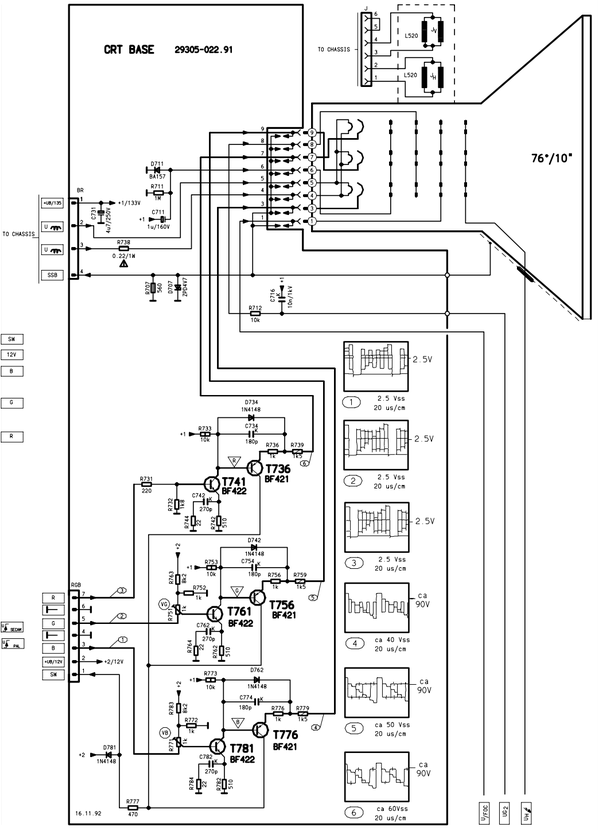

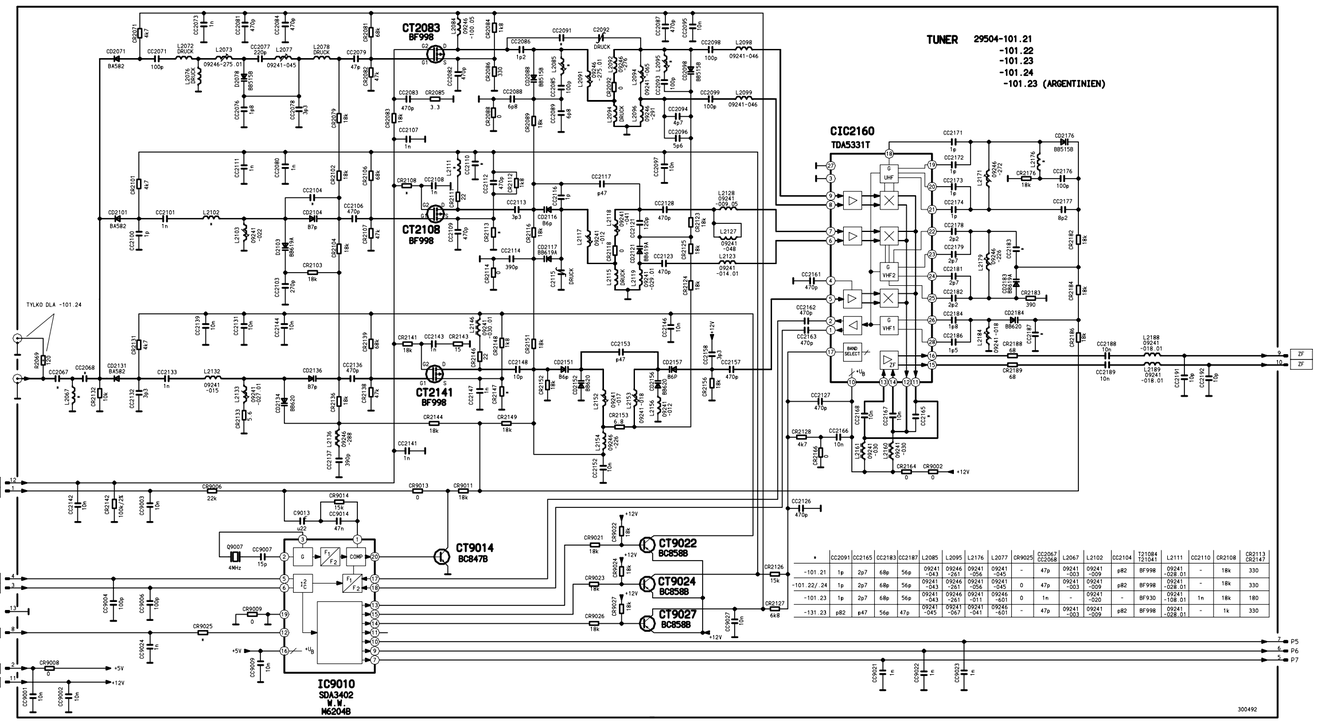

	CC2091	CC2165	CC2183	CC2187	L2085	L2095	L2176	L2077	CR9025	CC2067 CC2068	L2067	L2102	CC2104	L2108 L2134	L2111	CC2110	CR2108	CR2113 CR2147
-101.21	1p	2p7	68p	56p	09241 -043	09241 -261	09241 -056	09241 -040	-	47p	09241 -003	09241 -009	p82	BF998	09241 -108.01	-	18k	330
-101.22/.24	1p	2p7	68p	56p	09241 -043	09241 -261	09241 -056	09241 -040	0	47p	09241 -003	09241 -009	p82	BF998	09241 -108.01	-	18k	330
-101.23	1p	2p7	68p	56p	09241 -043	09241 -261	09241 -211	09241 -601	0	1n	-	09241 -020	-	BF930	09241 -108.01	1n	18k	180
-131.23	p82	p47	56p	47p	09241 -045	09241 -067	09241 -041	09241 -601	-	47p	09241 -003	09241 -009	p82	BF998	09241 -108.01	-	1k	330

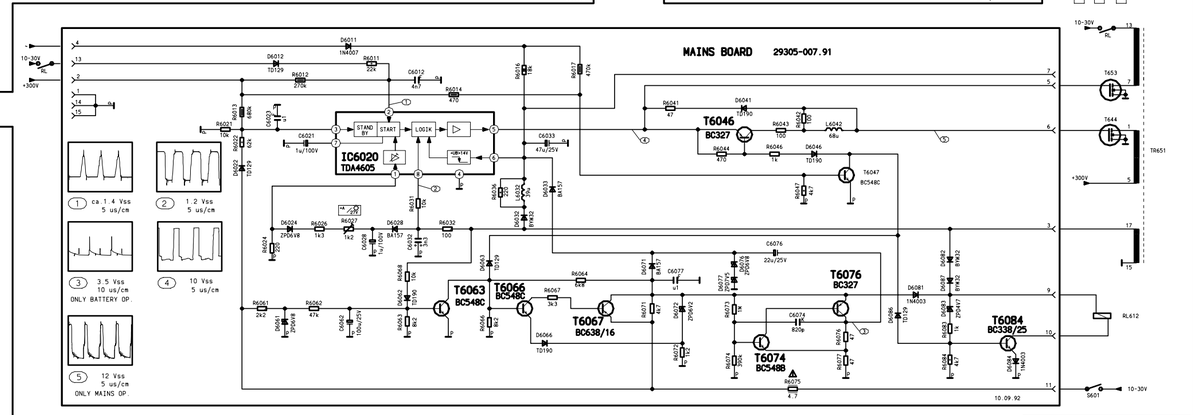

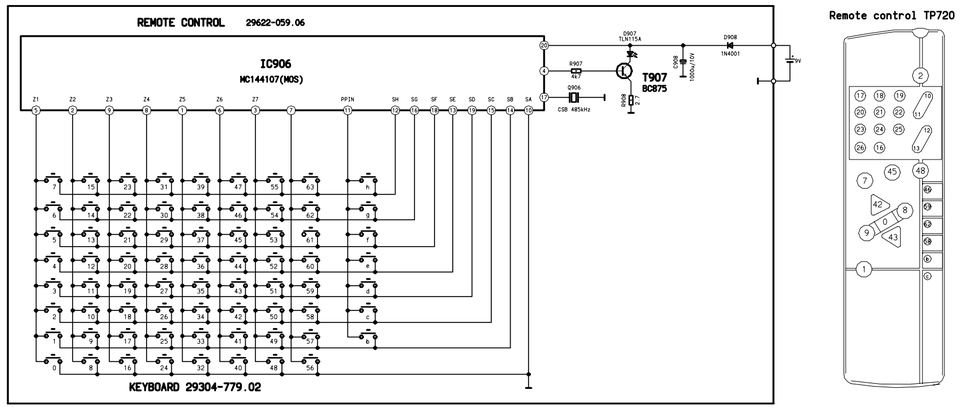

Grundig chassis CUC5200 (2/2)