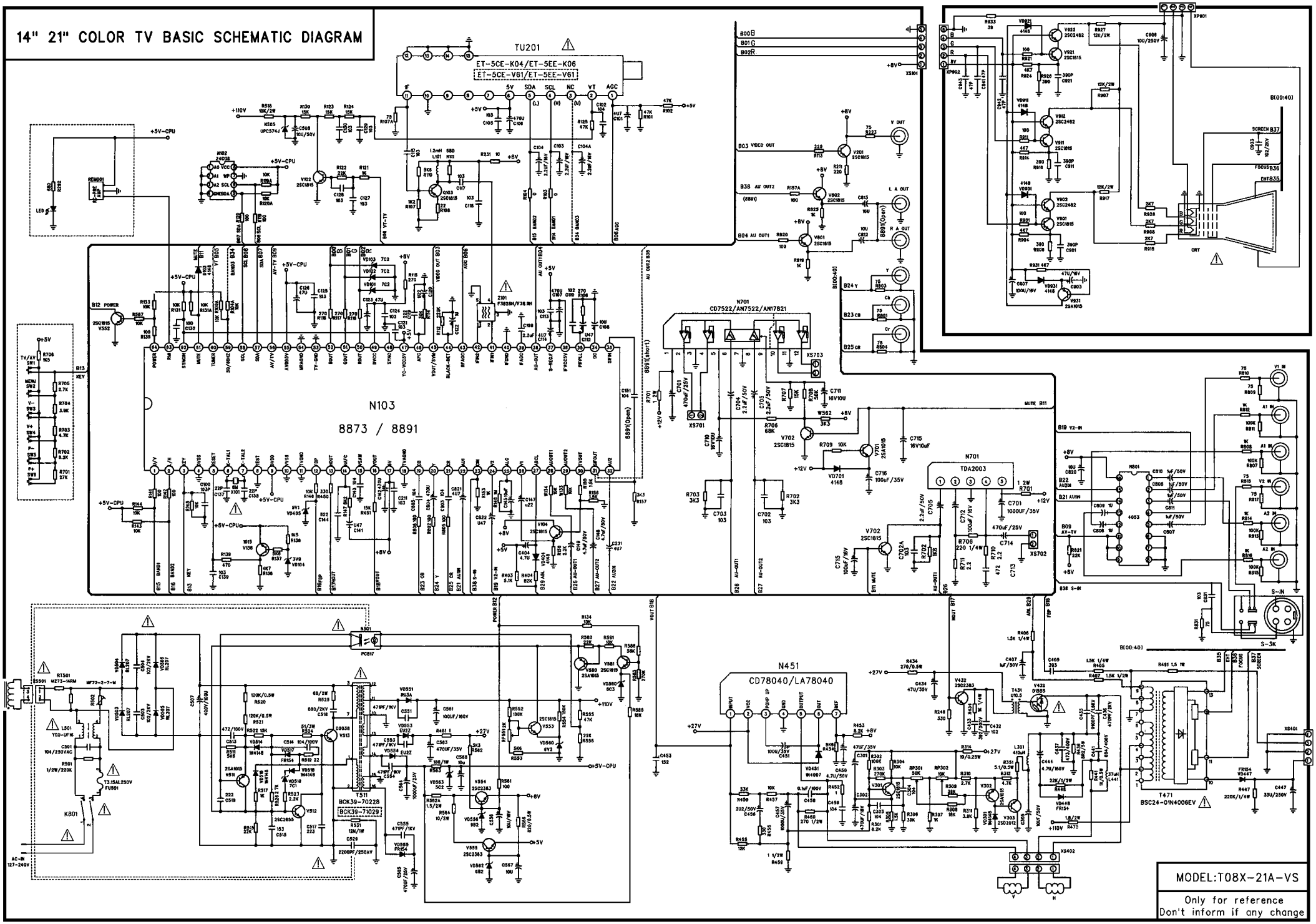14" 21" COLOR TV BASIC SCHEMATIC DIAGRAM