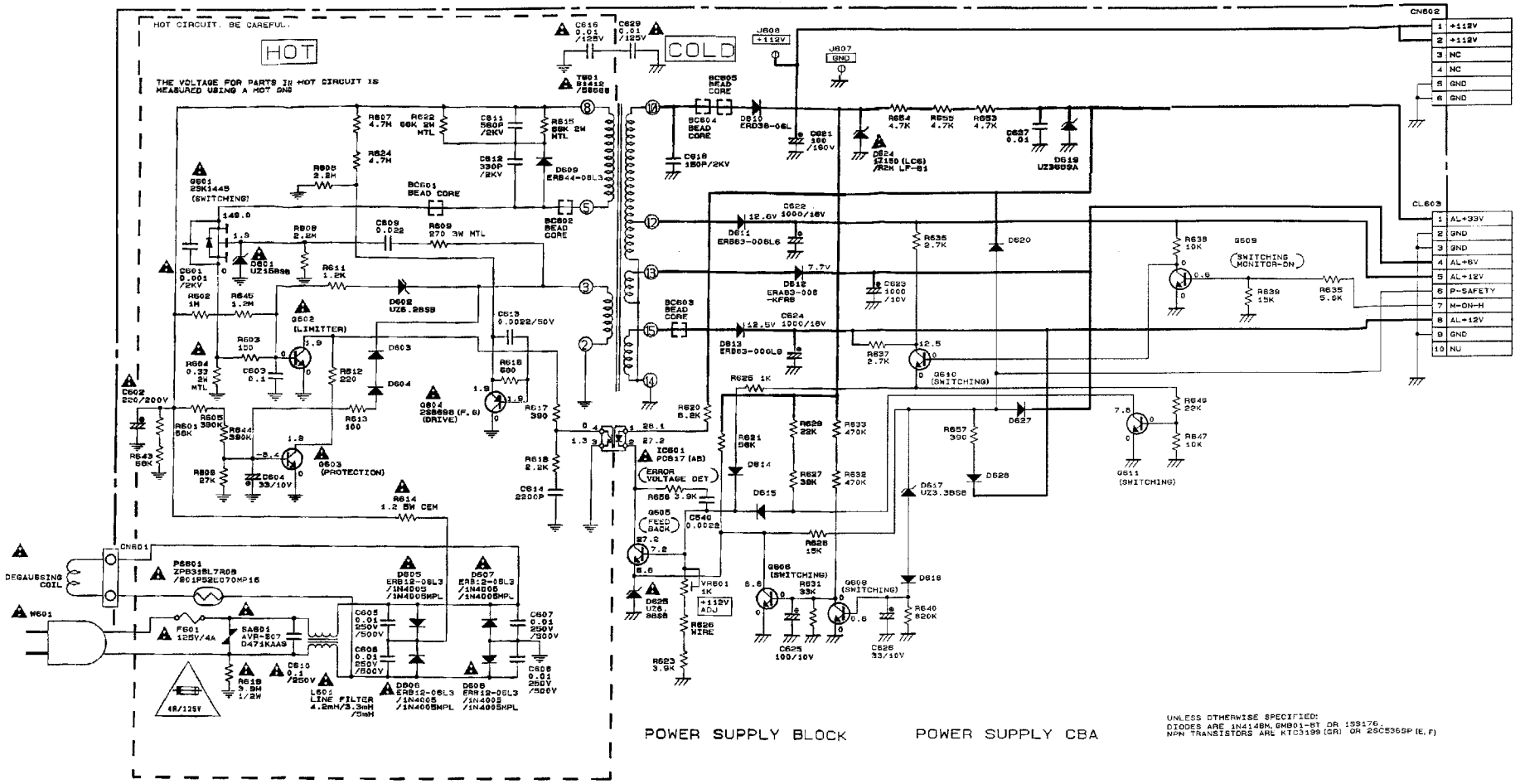
HOT CIRCUIT. BE CAREFUL.
HOT
THE VOLTAGE FOR PARTS IN HOT CIRCUIT IS MEASURED USING A HOT GND
COLD
C616 0.01 /125V
C629 0.01 /125V
T601 S3412 /S5668
J608 +112V
J607 GND
CN602
1 +112V
2 +112V
3 NC
4 NC
5 GND
6 GND
CL603
1 AL+33V
2 GND
3 GND
4 AL+5V
5 AL+12V
6 P-SAFETY
7 M-ON-H
8 AL+12V
9 GND
10 NU
Q601 2SK1445 (SWITCHING)
D601 UZ15B9B
Q602 (LIMITTER)
Q603 (PROTECTION)
Q604 2SB698 (F.B) (DRIVE)
IC601 PC817 (AB)
ERROR VOLTAGE DET
FEED BACK
Q605
Q606 (SWITCHING)
Q607 (SWITCHING)
Q608 (SWITCHING)
Q609 (SWITCHING)
Q610 (SWITCHING)
Q611 (SWITCHING)
SWITCHING MONITOR-ON
CN601
DEGAUSSING COIL
W601
PS601 ZPB31BL7R09 /SC1P52C070MP16
F601 125V/4A
SA601 AVR-S07 D471KAA9
4A/125V
L601 LINE FILTER 4.2mH/3.3mH /5mH
D605 ERB12-06L3 /1N4005 /1N4005MPL
D607 ERB12-05L3 /1N4005 /1N4005MPL
D606 ERB12-06L3 /1N4005 /1N4005MPL
D608 ERB12-05L3 /1N4005 /1N4005MPL
C605 0.01 250V /500V
C606 0.01 250V /500V
C607 0.01 250V /500V
C608 0.01 250V /500V
C610 0.1 /250V
R619 3.9M 1/2W
R614 1.2 5W CEM
VR601 1K +112V ADJ
R626 WIRE
R623 3.9K
D625 UZ6.8B5B
C540 0.0022
R656 3.9K
R626 15K
D618
R640 820K
C625 100/10V
C626 33/10V
R631 33K
D617 UZ3.3B5B
D628
D627
D620
D619 UZ3689A
D624 Z150 (LCS) /R2M LP-81
D621 100 /160V
C618 150P/2KV
C622 1000/16V
C623 1000 /10V
C624 1000/16V
D611 ERB63-006L6
D612 ERB63-006 -KFRB
D613 ERB63-006L6
BC601 BEAD CORE
BC602 BEAD CORE
BC603 BEAD CORE
BC604 BEAD CORE
BC605 BEAD CORE
POWER SUPPLY BLOCK
POWER SUPPLY CBA
UNLESS OTHERWISE SPECIFIED:
DIODES ARE 1N4148M, GMB01-BT OR 1SS176.
NPN TRANSISTORS ARE KTC3199(GR) OR 2SC536SP(E,F)